EDGAR

Technical information

MATERIALS

Frame	Beech or pine wood and chipboard
Zitting / Seat	Nosag springs, HR Foam 35 kg/m³ (thickness 15 cm), 5 cm Duck filling
Rug vulling / Back Filling	Silicone

MATEN / MEASUREMENTS

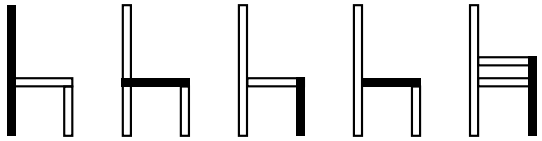

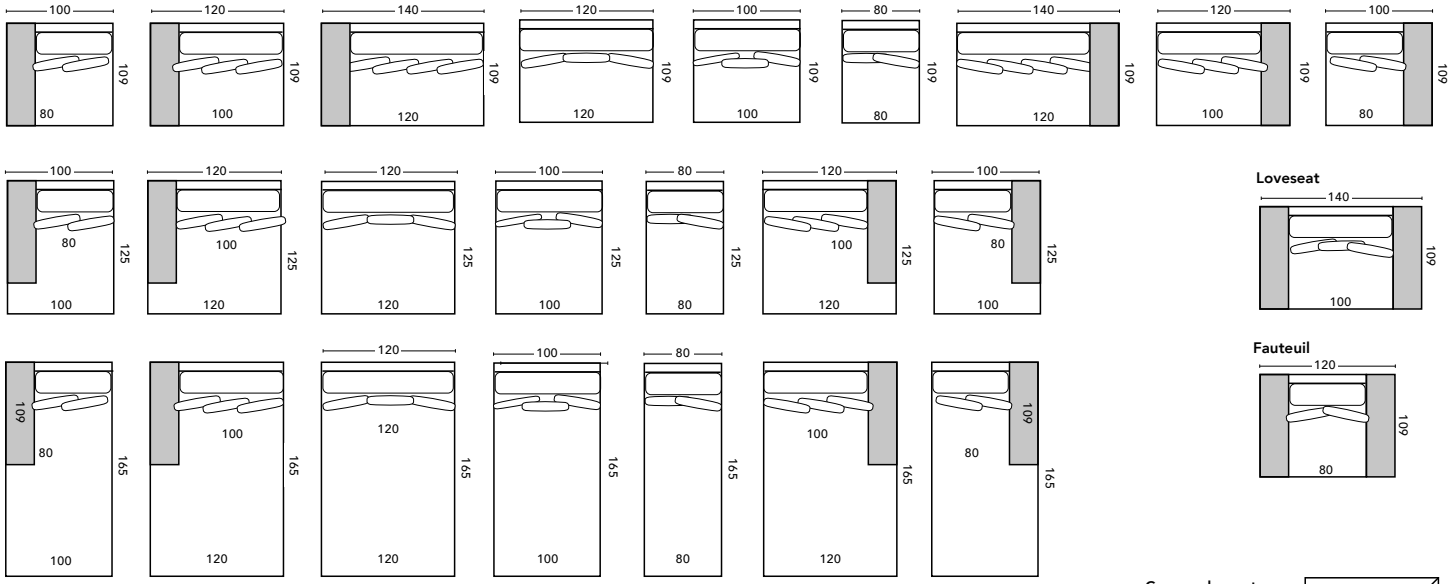

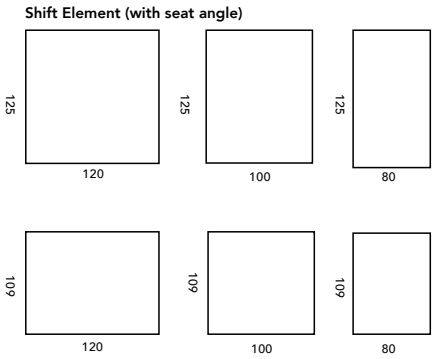

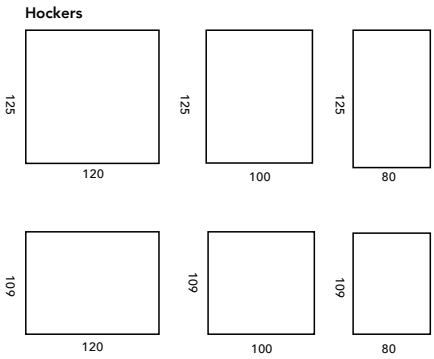

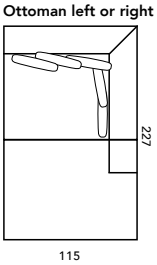

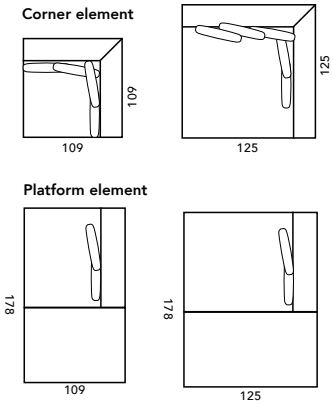

All data on this technical data sheet are for information only and are not of a binding nature. Colours shown may differ from the actual product. The design and dimensions may be different.